EXCALIBUR CURRENT-MODE SCSI TERMINATOR
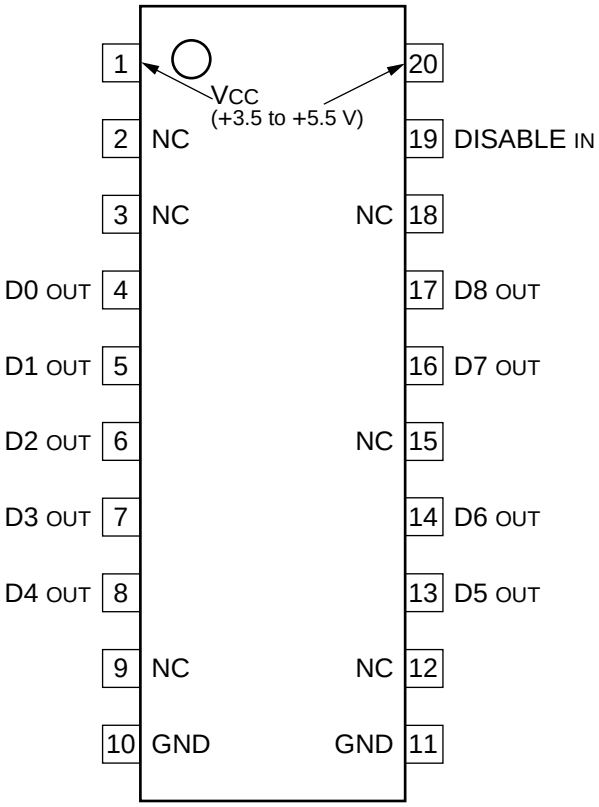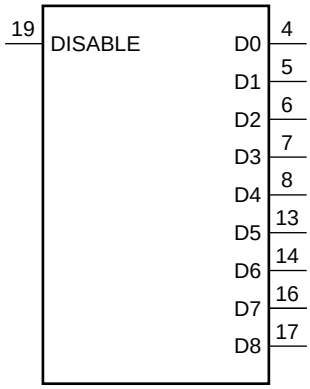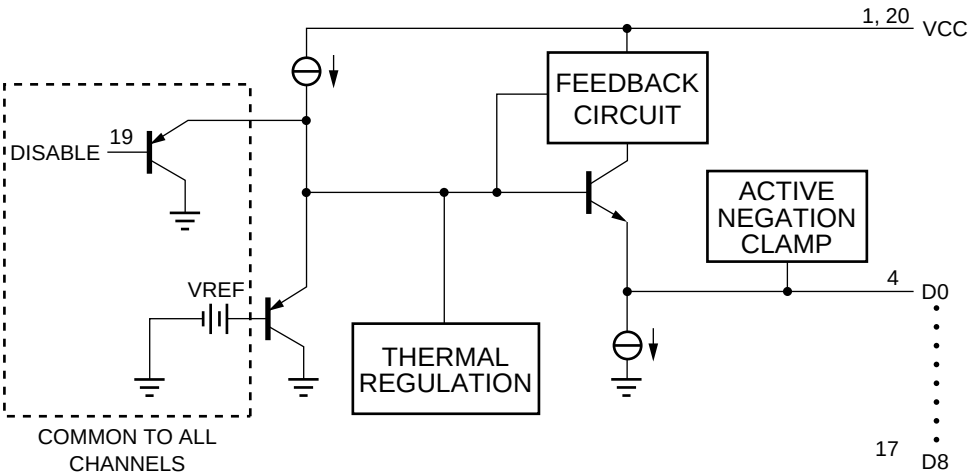
—TOP VIEW—